# Overlap Pent Double Bin Store

**English SS784**

**Assembly Instructions**

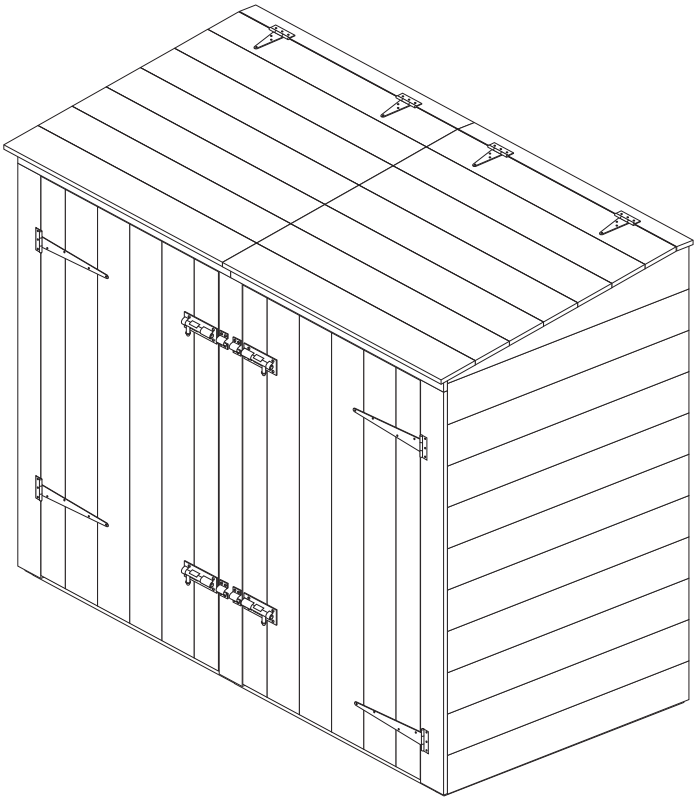

**Before assembly**

- We recommend that time is taken to read the instructions before starting assembly, then follow the easy step by step guide. The instruction sheet is only a guide to the assembly. Certain items may not be shown to scale.
- Check all components prior to assembly
- This product should be assembled by no less than two people
- Drill all components where indicated
- Please dispose of all packaging responsibly and recycle where possible in line with local authority requirements.

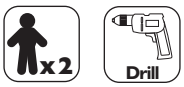


## Recommended tools for assembly

- Power Drill/Screwdriver
- Cross-head drill bit
- 3mm diameter drill bit
- Tape measure
- Spirit level

**IMPORTANT NOTE**
**This double bin store also forms the base kit for the triple & quad versions. Please see extension kit for additional instructions for the assembly of triple and quad bin stores.**

**Biocidal Products Regulation EU 528/2012**
Wolmanit® CX treated wood, is a treated article incorporating biocidal products: copper hydroxide carbonate, bis(N-cyclohexyl-diazenium-dioxy)-copper and Boric Acid. They protect wood against fungal decay, rot and insect attack. Wear gloves when handling freshly treated wood. Avoid breathing dust when cutting wood. Dispose of off-cuts responsibly.

| No. | Components | Qty. |
|---|---|---|
| 1 | Back panel (35x700x1275mm) | 2 |
| 2 | Left side panel | 1 |
| 3 | Right side panel | 1 |
| 4 | Door frame upright (35x28x1092mm) | 4 |
| 5 | Base rail (45x15x700mm Bevelled) | 2 |
| 6 | Door header frame (45x28x700mm) | 2 |
| 7 | Support frame (35x697x1137mm) | 1 |
| 8 | Header strip (48x12x743mm) | 2 |
| 9 | Door hinge strip (78x12x1120mm) | 2 |
| 10 | Centre coverstrip (70x12x1120mm) | 1 |
| 11 | Lid hinge strip (40x12x760mm) | 2 |
| 12 | Lid stay support (45x28x100mm) | 2 |
| 13 | Door | 2 |
| 14 | Lid (Width 760mm) | 2 |
| 15 | Lid stay (28x16x650mm) | 2 |

| No. | Fixing Kit | Qty. |
|---|---|---|
| 16 | Black T-hinge (10") | 4 |
| 17 | Black T-hinge (4") | 4 |
| 18 | Tower bolt and catch plate | 4 |
| 19 | Chain | 4 |
| 20 | 70mm screws | 4 |
| 21 | 60mm screws | 4 |
| 22 | 50mm screws | 38 |
| 23 | 25mm black screws | 79 |
| 24 | 19mm black round head screws | 32 |
| 25 | 19mm round head screws | 4 |

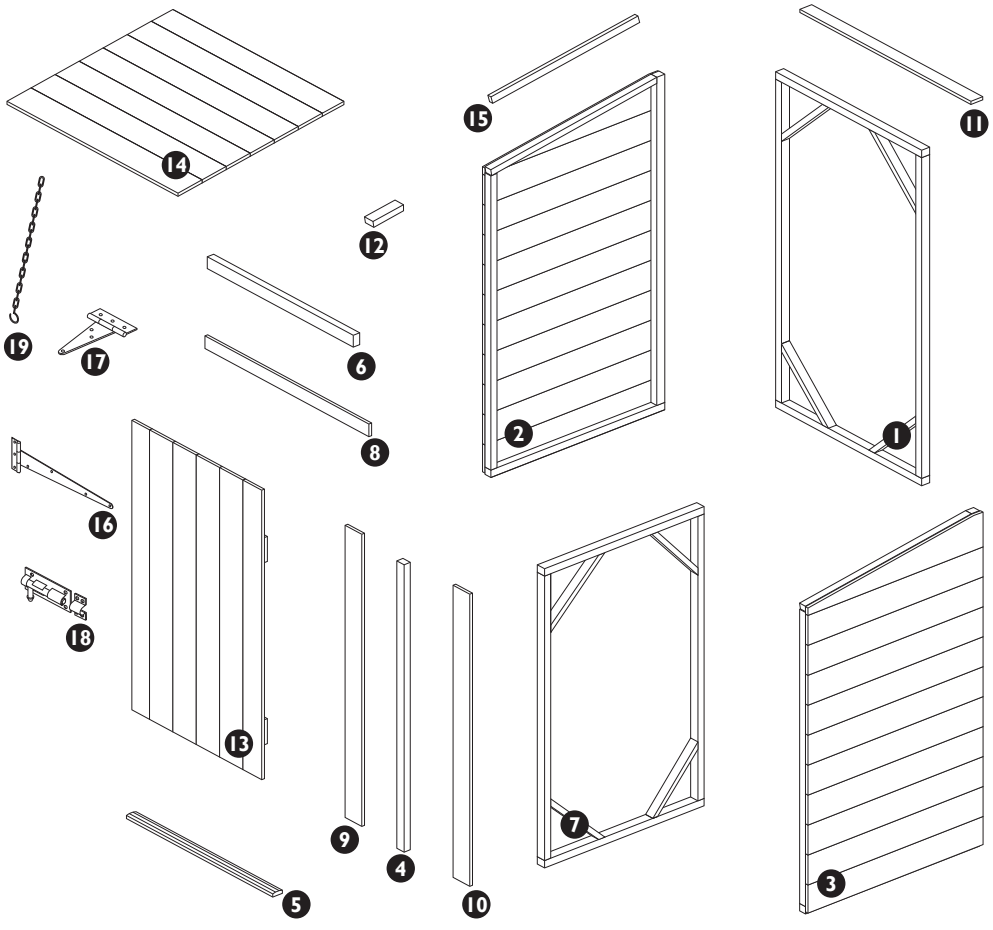

## 1. Side & back panels

| No. | Components for this section | Qty. |
|---|---|---|
| 1 | Back panel (35x700x1275mm) | 2 |
| 2 | Left side panel | 1 |
| 3 | Right side panel | 1 |

| No. | Fixings for this section | Qty. |
|---|---|---|
| 22 | 50mm screws | 12 |




Drill pilot holes for all screws in this section.

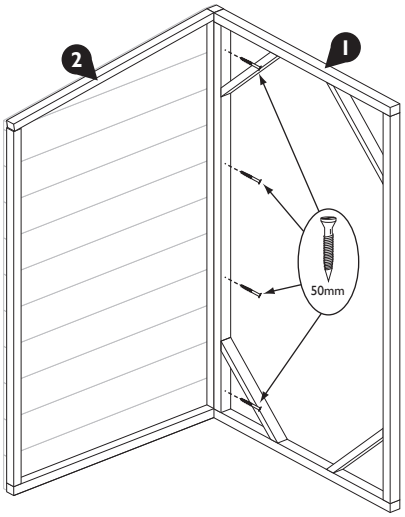


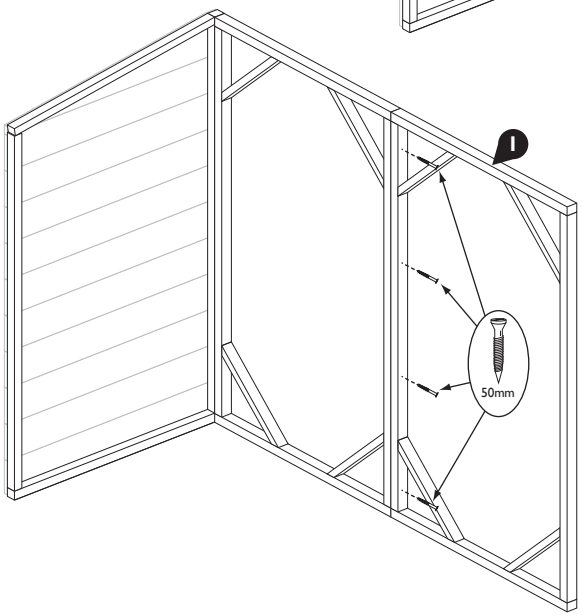


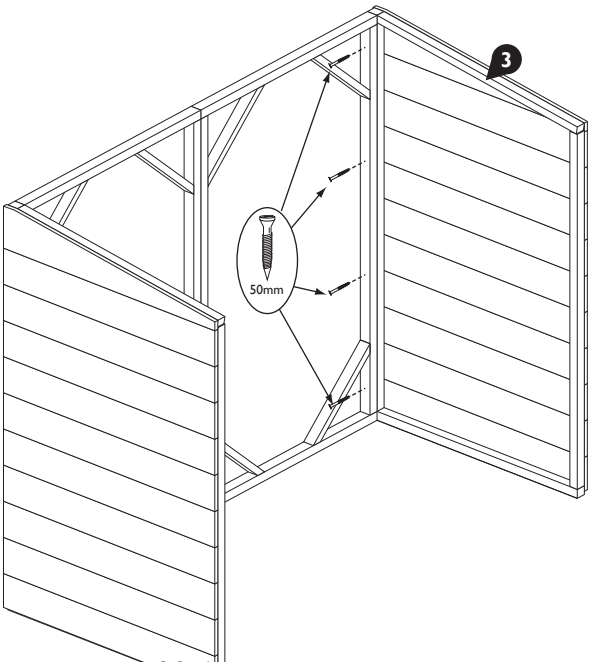


**Important Note**
**Triple & Quad Bin Stores Only.**

Add the additional back panels from the extension kit(s) before attaching the last side panel.

*See section 1 of the extension kit instructions.*

## 2. Door uprights

| No. | Components for this section | Qty. |
|---|---|---|
| 4 | Door frame upright (35x28x1092mm) | 4 |

| No. | Fixings for this section | Qty. |
|---|---|---|
| 22 | 50mm screws | 12 |




Drill pilot holes for all screws in this section.

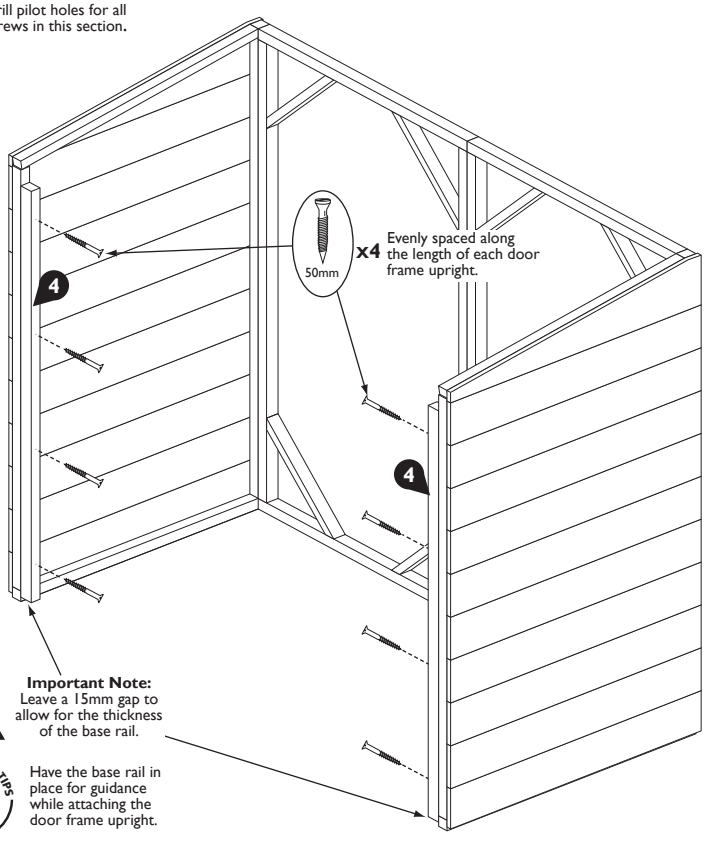


**Important Note:**
Leave a 15mm gap to allow for the thickness of the base rail.

TOP TIPS

Have the base rail in place for guidance while attaching the door frame upright.

**Important Note**
**Triple & Quad Bin Stores Only.**

Assemble additional centre upright sections:
1 additional for triple
2 additional for quad

*See section 2 of the extension kit instructions.*

### Centre uprights section

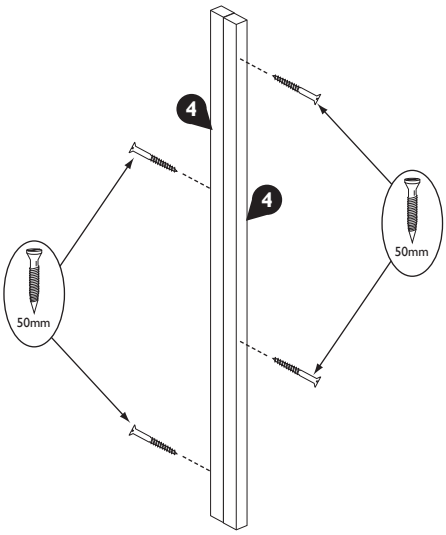

## 3. Base rails, door headers & support frame

| No. | Components for this section | Qty. |
|---|---|---|
| 5 | Base rail (45x15x700mm Bevelled) | 2 |
| 6 | Door header frame (45x28x700mm) | 2 |
| 7 | Support frame (35x697x1137mm) | 1 |
| | Centre upright section | 1 |

| No. | Fixings for this section | Qty. |
|---|---|---|
| 20 | 70mm screws | 4 |
| 21 | 60mm screws | 4 |
| 22 | 50mm screws | 8 |

3mm Drill — Drill pilot holes for all screws in this section.

**Important Note**
**Triple & Quad Bin Stores Only.**
Add the additional header and base rails and support frames from the extension kit(s).
*See section 3 of the extension kit instructions.*

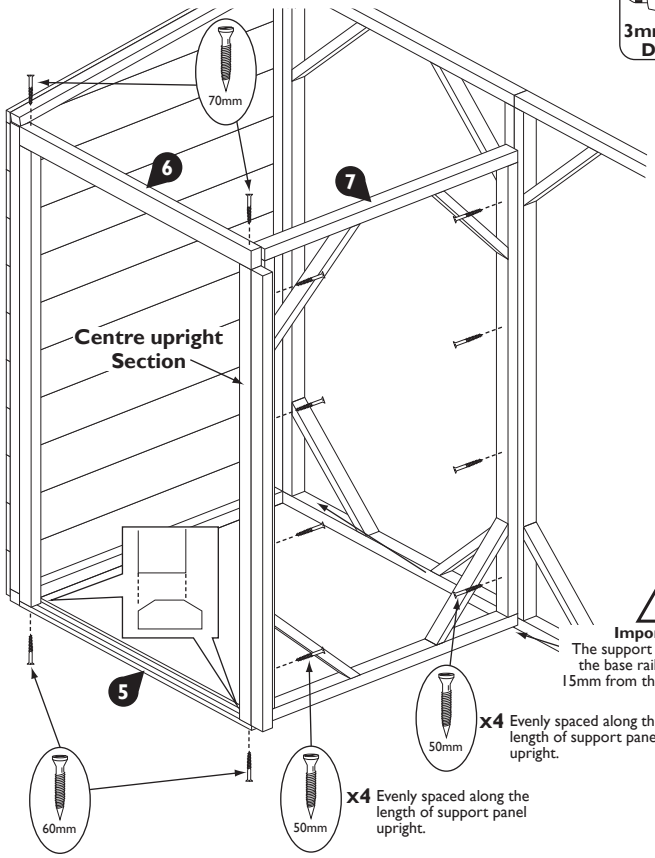


**Important Note:**
The support frame should sit on the base rail at the front & set 15mm from the ground at the back.

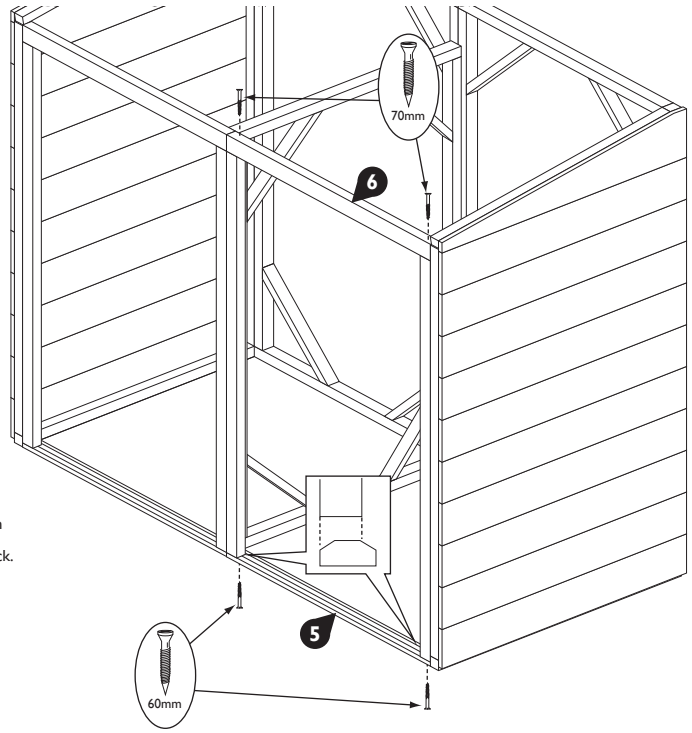


## 4. Lid stay support blocks, hinge & header strips

| No. | Components for this section | Qty. |
|---|---|---|
| 8 | Header strip (48x12x743mm) | 2 |
| 9 | Door hinge strip (78x12x1120mm) | 2 |
| 10 | Centre strip (70x12x1120mm) | 1 |
| 11 | Lid hinge strip (40x12x760mm) | 2 |
| 12 | Lid stay support (45x28x100mm) | 2 |

| No. | Fixings for this section | Qty. |
|---|---|---|
| 22 | 50mm screws | 4 |
| 23 | 25mm black screws | 27 |

3mm Drill — Drill pilot holes for each screw in this section.

**Important Note**
**Triple & Quad Bin Stores Only.**
Add the additional header strips, centre strips and lid hinge strips from the extension kit(s).
*See section 4 of the extension kit instructions.*

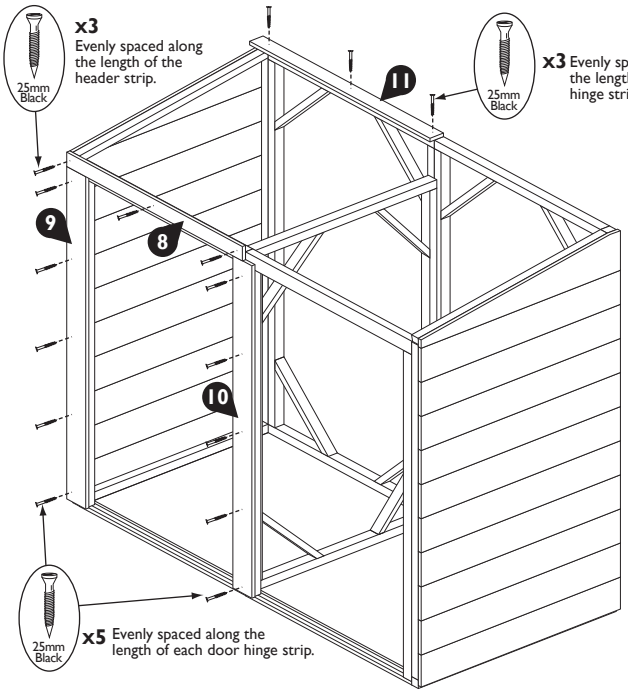


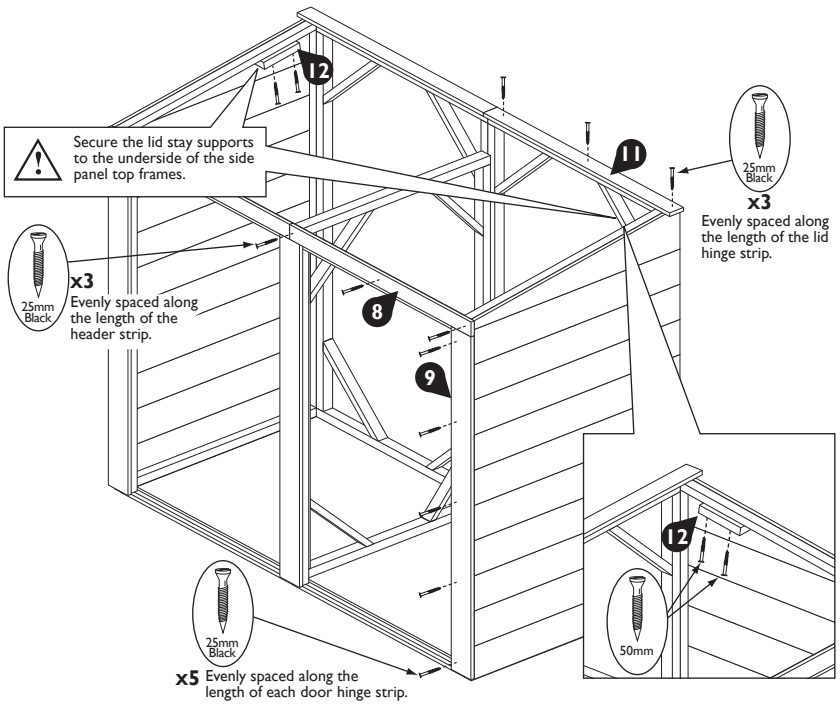

## 5. Doors & Lids

| No. | Components for this section | Qty. |
|---|---|---|
| 13 | Door | 2 |
| 14 | Lid | 2 |

| No. | Fixings for this section | Qty. |
|---|---|---|
| 16 | Black T-hinge (10") | 4 |
| 17 | Black T-hinge (4") | 4 |
| 23 | 25mm black screws | 52 |

**Important Note**
All doors are the same and can be hung either left or right handed depending on preference.

**Important Note**
**Triple & Quad Bin Stores Only.**
Use the narrow bin lids from the extension kit for the middle lid(s)

*See section 5 of the extension kit instructions.*

**Important Note:**
When placing the lid on top of the store, ensure the correct orientation.

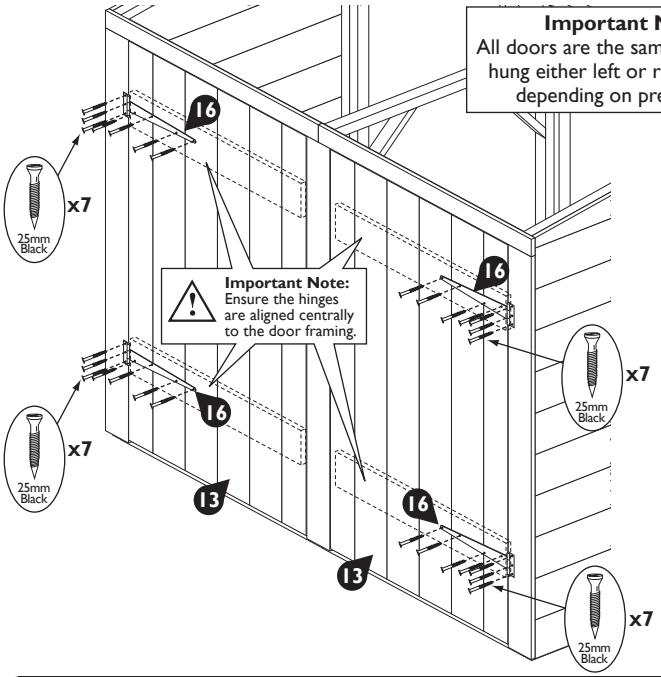


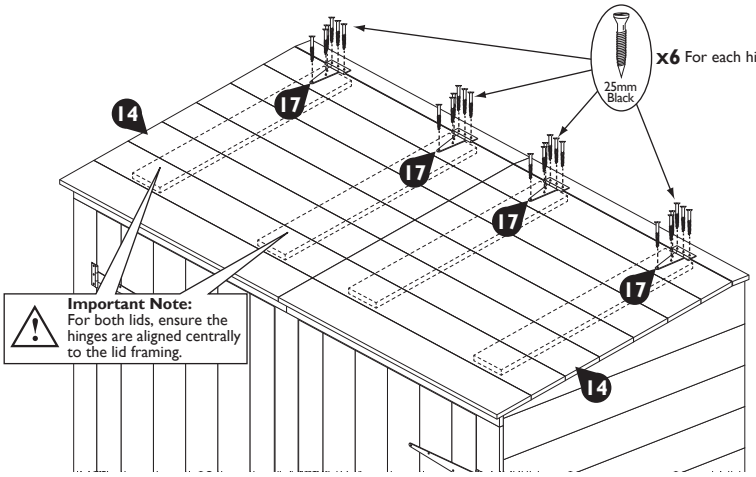


## 6. Towerbolts, Lid Stays & Chains

| No. | Components for this section | Qty. |
|---|---|---|
| 15 | Lid stay (28x16x650mm) | 2 |

| No. | Fixings for this section | Qty. |
|---|---|---|
| 18 | Tower bolt and catch plate | 4 |
| 19 | Chain | 4 |
| 22 | 50mm screws | 2 |
| 24 | 19mm black round head screws | 32 |
| 25 | 19mm round head screws | 4 |

**Important Note**
**Triple & Quad Bin Stores Only.**
Towerbolts and chains are fitted the same way on the extension kit lid(s). For additional lid stays,

*See section 6 of the extension kit instructions.*

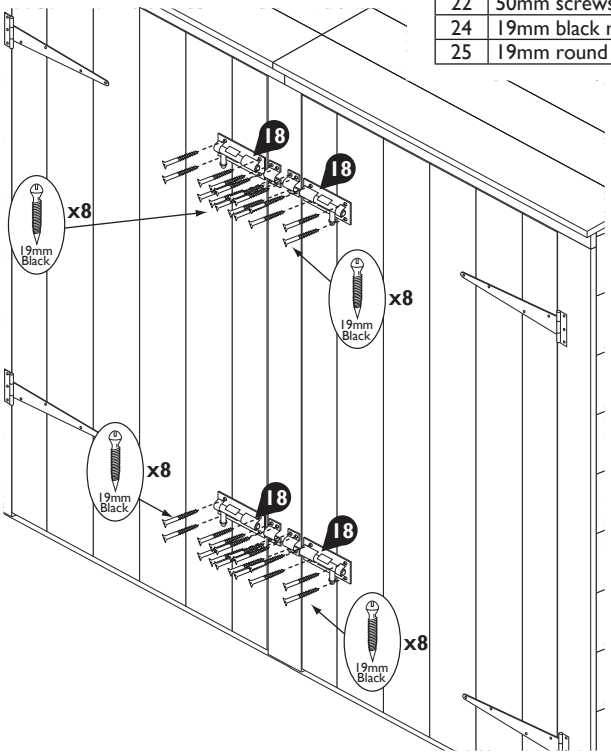


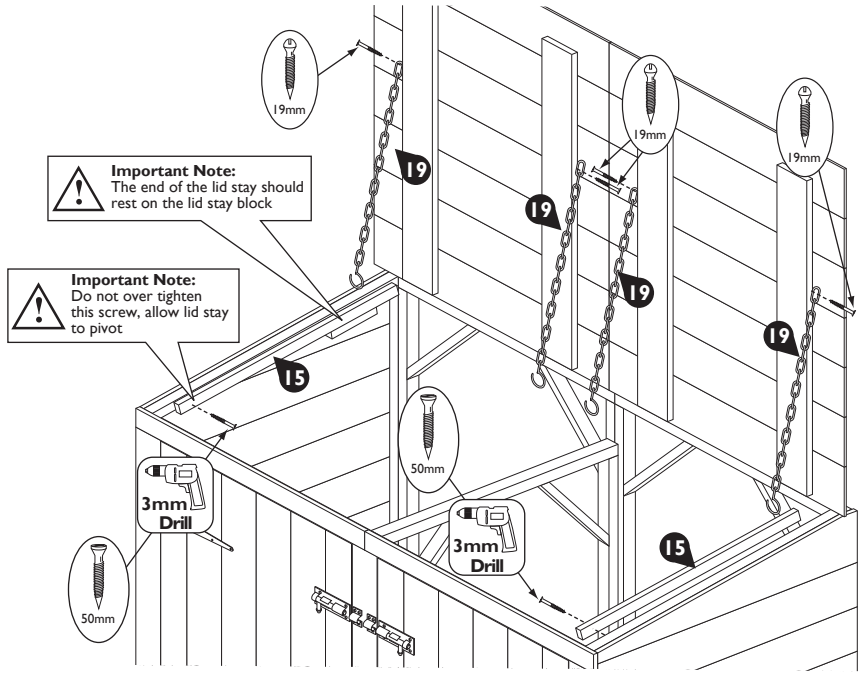


## Important information - retain for future reference

**Timber Information.**
As timber is a natural material, there are certain weather conditions that may affect the materials properties. In times of excessive dry spells the material may lose some of its internal moisture causing a certain degree of shrinkage on a panel and in periods of excessive rain there will be a certain amount of swelling throughout the wooden panels. This process can not be avoided. If you have problems with certain boards shrinking in dry spells try to decrease the amount of direct sunlight on the building or the amount of air passing over the building. During hot spells spray water directly onto the panels with the aid of a garden hose.

If in doubt of any aspect regarding the assembly, use or safety of your building please contact us:

**Help Line: (Normal Office Hours) 01829 261 121**

**Email: support@rowgar.co.uk**

ROWLINSON GARDEN PRODUCTS LIMITED
Green Lane
Wardle Nr. Nantwich
Cheshire
CW5 6BN
**www.rowlinsongarden.co.uk**

We constantly improve the quality of our products, occasionally the components may differ from the components shown and are only correct at time of printing. We reserve the right to change the specification of our products without prior notice.

**2026 © Rowlinson Garden Products Ltd**