Overlap Pent Bin Extension Kit

English SS785

Assembly Instructions

Before assembly

- We recommend that time is taken to read the instructions before starting assembly, then follow the easy step by step guide. The instruction sheet is only a guide to the assembly. Certain items may not be shown to scale.
- Check all components prior to assembly
- This product should be assembled by no less than two people
- Drill all components where indicated
- Please dispose of all packaging responsibly and recycle where possible in line with local authority requirements.

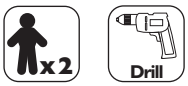

Recommended tools for assembly

- Power Drill/Screwdriver
- Cross-head drill bit
- 3mm diameter drill bit
- Tape measure
- Spirit level

Biocidal Products Regulation EU 528/2012
Wolmanit® CX treated wood, is a treated article incorporating biocidal products: copper hydroxide carbonate, bis(N-cyclohexyl-diazenium-dioxy)-copper and Boric Acid. They protect wood against fungal decay, rot and insect attack. Wear gloves when handling freshly treated wood. Avoid breathing dust when cutting wood. Dispose of off-cuts responsibly.

IMPORTANT NOTE
The double bin store forms the base kit for the triple & quad versions.

Please use this instruction in conjunction with the double bin store kit instruction to complete the assembly.

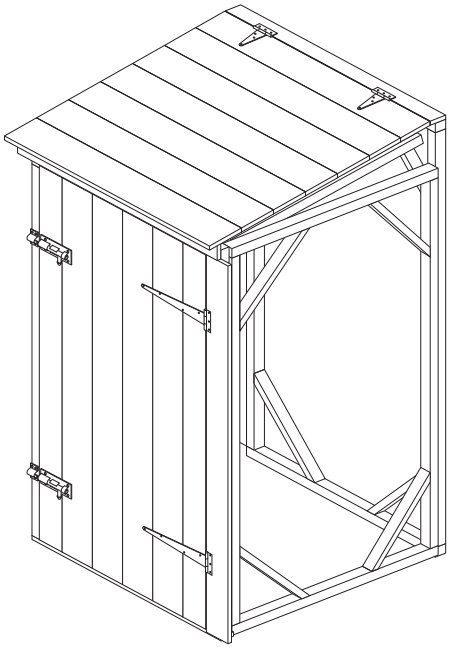

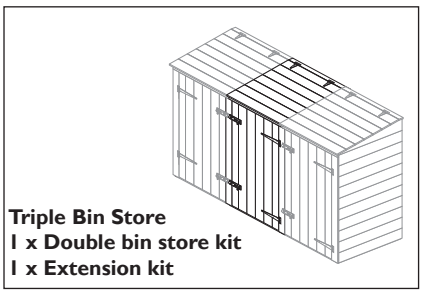

Triple Bin Store
1 x Double bin store kit
1 x Extension kit

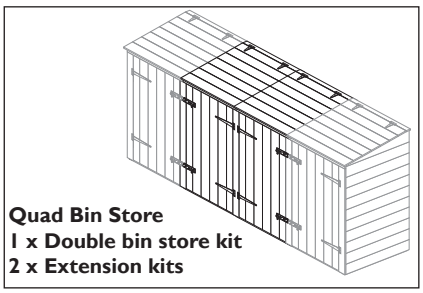

Quad Bin Store
1 x Double bin store kit
2 x Extension kits

No.	Components	Qty.
1	Back panel (35x700x1275mm)	1
4	Door frame upright (35x28x1092mm)	2
5	Base rail (45x15x700mm Bevelled)	1
6	Door header frame (45x28x700mm)	1
7	Support frame (35x697x1137mm)	1
8E	Header strip (48x12x700mm)	1
10	Centre coverstrip (70x12x1120mm)	1
11E	Lid hinge strip (40x12x700mm)	1
12	Lid stay support (45x28x100mm)	1
13	Door	1
14E	Centre lid (Width 698mm)	1
15	Lid stay (28x16x650mm)	1

No.	Fixing Kit	Qty.
16	Black T-hinge (10")	2
17	Black T-hinge (4")	2
18	Tower bolt and catch plate	2
19	Chain	2
20	70mm screws	2
21	60mm screws	2
22	50mm screws	19
23	25mm black screws	37
24	19mm black round head screws	16
25	19mm round head screws	2

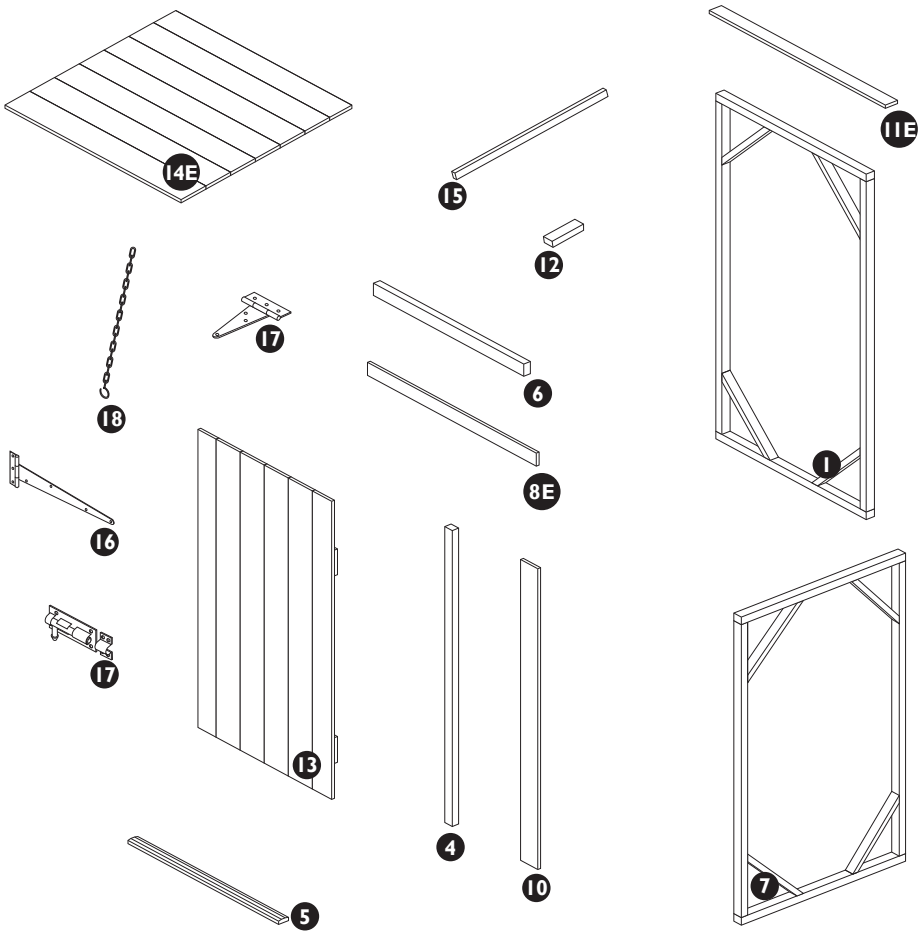

1. Side & back panels

Triple Bin Store

No.	Components for this section	Qty.
1	Back panel (35x700x1275mm)	1

No.	Fixings for this section	Qty.
22	50mm screws	4



Drill pilot holes for all screws in this section.

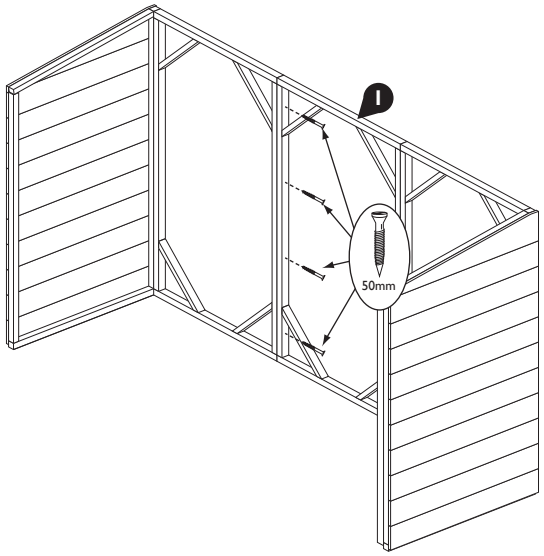

Quad Bin Store

No.	Components for this section	Qty.
1	Back panel (35x700x1275mm)	2

No.	Fixings for this section	Qty.
22	50mm screws	8



Drill pilot holes for all screws in this section.

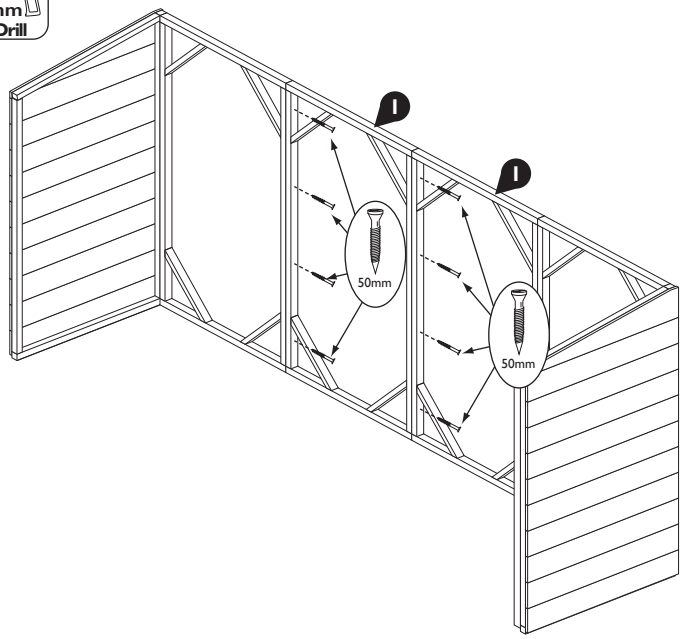

2. Door frame uprights

Triple Bin Store

No.	Components for this section	Qty.
4	Door frame upright (35x28x1092mm)	2

No.	Fixings for this section	Qty.
22	50mm screws	4



Drill pilot holes for all screws in this section.

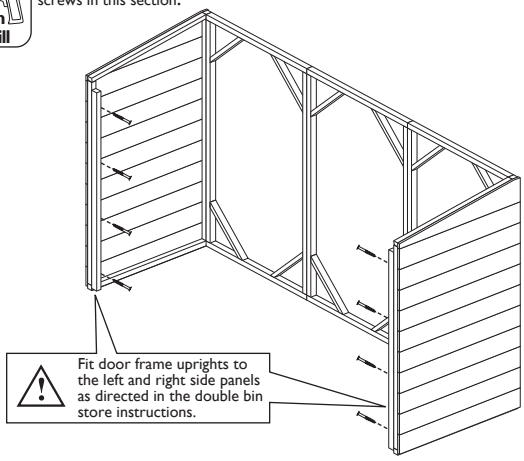

Fit door frame uprights to the left and right side panels as directed in the double bin store instructions.

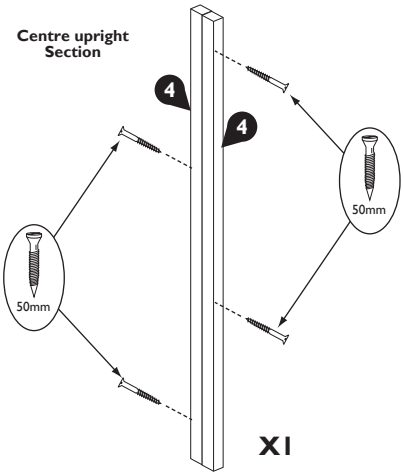

X1

Quad Bin Store

No.	Components for this section	Qty.
4	Door frame upright (35x28x1092mm)	4

No.	Fixings for this section	Qty.
22	50mm screws	8



Drill pilot holes for all screws in this section.

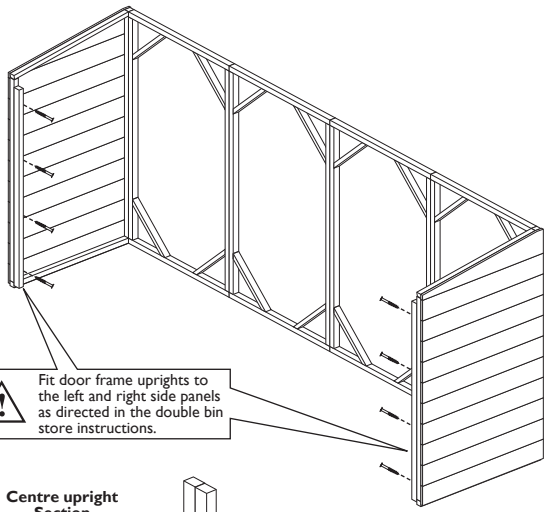

Fit door frame uprights to the left and right side panels as directed in the double bin store instructions.

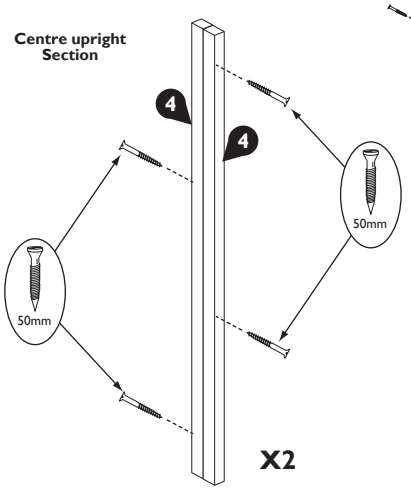

X2

3. Base rails, door headers & support frames

Triple Bin Store

No.	Components for this section	Qty.
5	Base rail (45x15x700mm Bevelled)	1
6	Door header frame (45x28x700mm)	1
7	Support frame (35x697x1137mm)	1
	Centre upright section	1



Drill pilot holes for all screws in this section.

No.	Fixings for this section	Qty.
20	70mm screws	2
21	60mm screws	2
22	50mm screws	8



Drill pilot holes for all screws in this section.

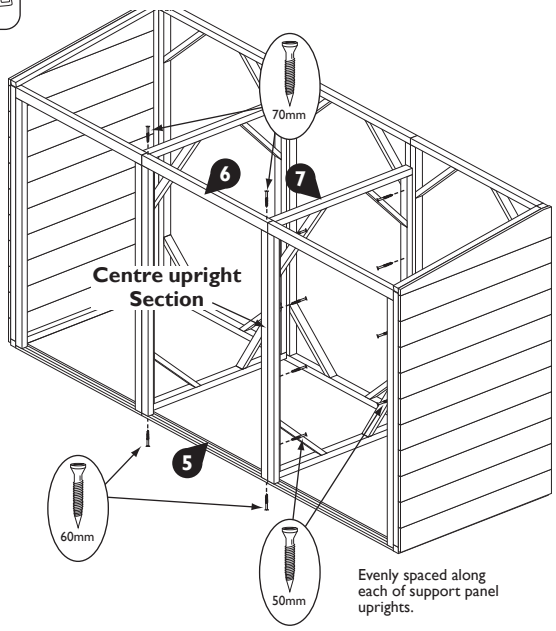

Evenly spaced along each of support panel uprights.

Quad Bin Store

No.	Components for this section	Qty.
5	Base rail (45x15x700mm Bevelled)	2
6	Door header frame (45x28x700mm)	2
7	Support frame (35x697x1137mm)	2
	Centre upright section	2



Drill pilot holes for all screws in this section.

No.	Fixings for this section	Qty.
20	70mm screws	4
21	60mm screws	4
22	50mm screws	16

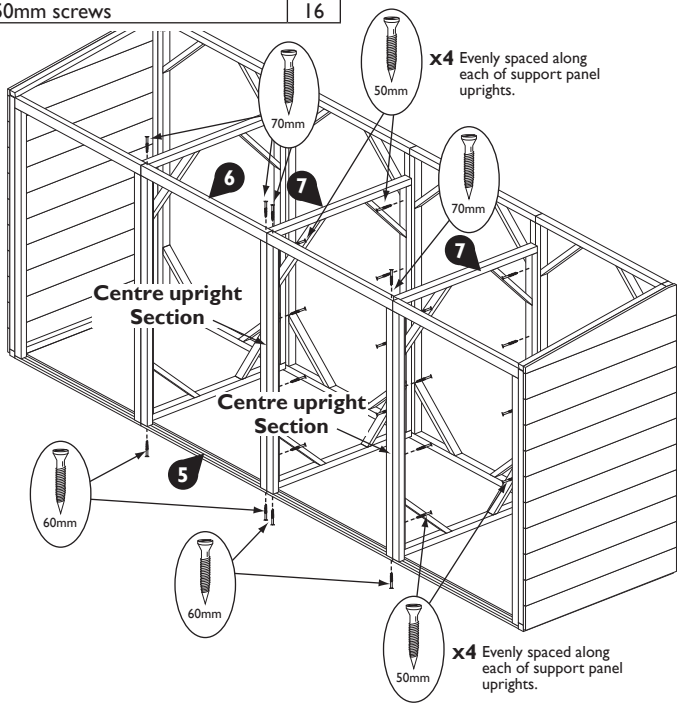

4. Lid stay support blocks, hinge & header strips

Triple Bin Store

No.	Components for this section	Qty.
8E	Header strip (48x12x740mm)	1
10	Centre strip (70x12x1120mm)	1
11E	Lid hinge strip (40x12x760mm)	1
12	Lid stay support (45x28x100mm)	1



Drill pilot holes for all screws in this section.

No.	Fixings for this section	Qty.
22	50mm screws	2
23	25mm black screws	11

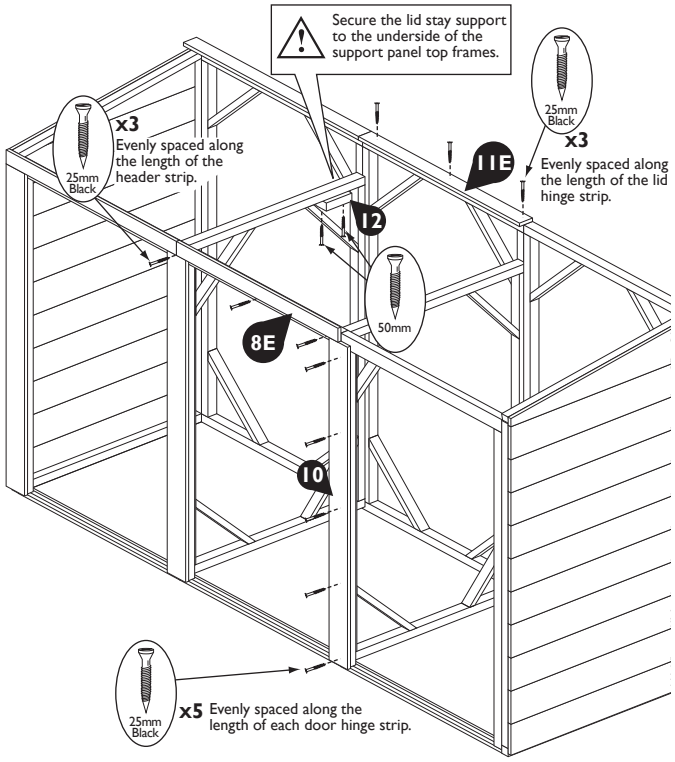

Quad Bin Store

No.	Components for this section	Qty.
8E	Header strip (48x12x740mm)	2
10	Centre strip (70x12x1120mm)	2
11E	Lid hinge strip (40x12x760mm)	2
12	Lid stay support (45x28x100mm)	2



Drill pilot holes for all screws in this section.

No.	Fixings for this section	Qty.
22	50mm screws	4
23	25mm black screws	22

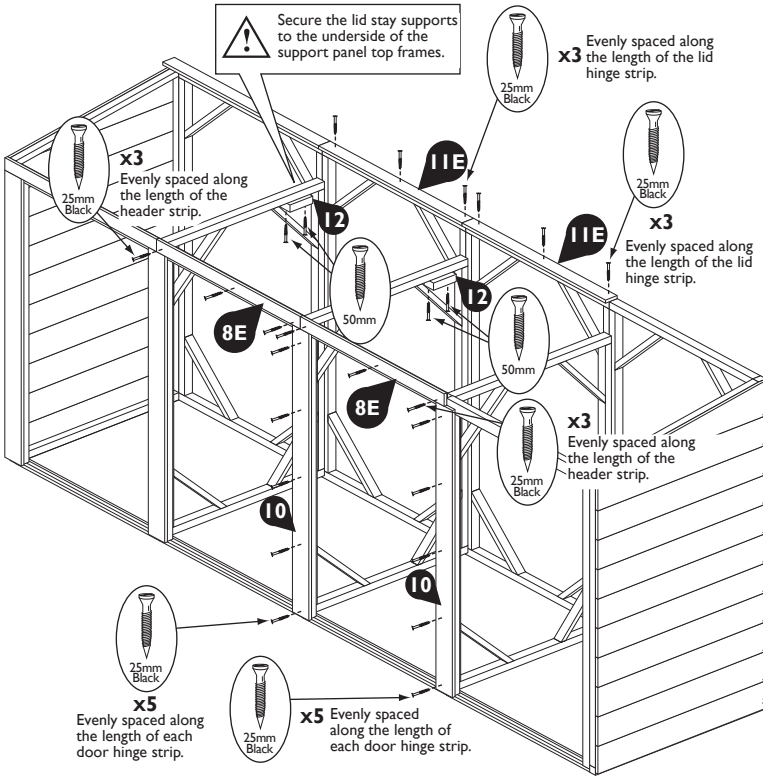

5. Doors & lids

Triple Bin Store

No.	Components for this section	Qty.
13	Door	1
14E	Centre lid (Width 698mm)	1

No.	Fixings for this section	Qty.
16	Black T-hinge (10")	2
17	Black T-hinge (4")	2
23	25mm black screws	26

Important Note
All doors are the same and can be hung either left or right handed depending on preference.

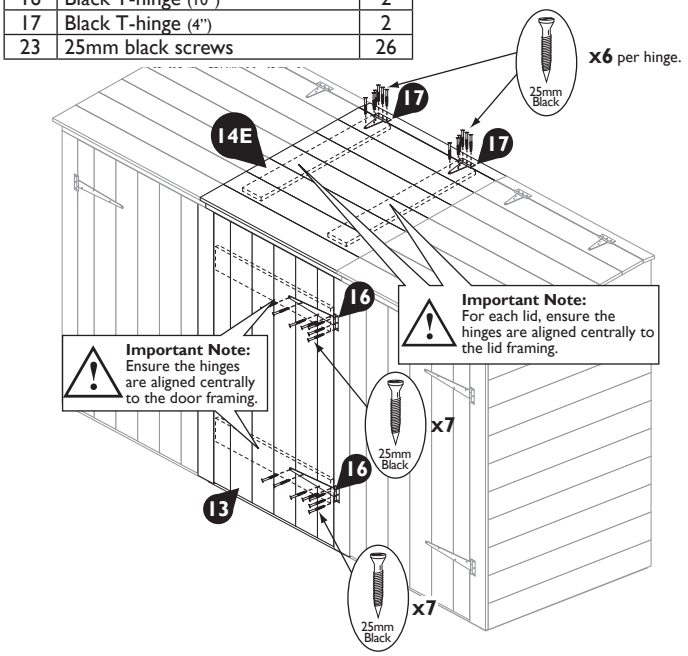

Quad Bin Store

No.	Components for this section	Qty.
13	Door	2
14E	Centre lid (Width 698mm)	2

No.	Fixings for this section	Qty.
16	Black T-hinge (10")	4
17	Black T-hinge (4")	4
23	25mm black screws	52

Important Note
All doors are the same and can be hung either left or right handed depending on preference.

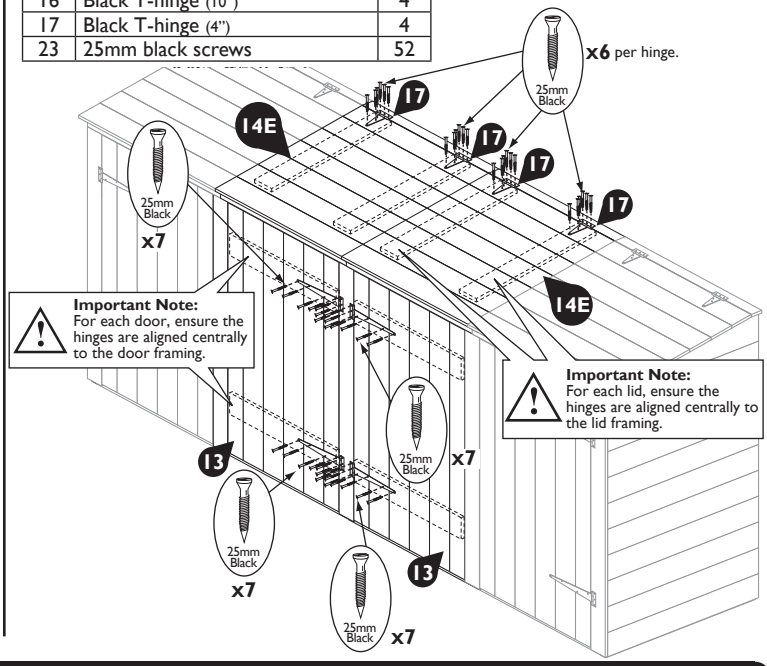

6. Towerbolts, lid stays & chains

Triple Bin Store

No.	Components for this section	Qty.
15	Lid stay (28x16x650mm)	1

No.	Fixings for this section	Qty.
18	Tower bolt and catch plate	2
19	Chain	2
22	50mm screws	1
24	19mm black round head screws	16
25	19mm round head screws	2

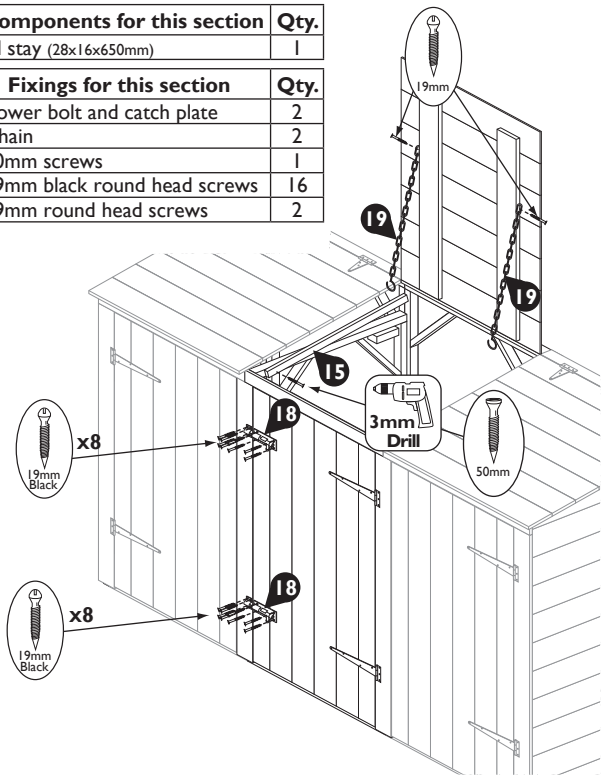

Quad Bin Store

No.	Components for this section	Qty.
15	Lid stay (28x16x650mm)	2

No.	Fixings for this section	Qty.
18	Tower bolt and catch plate	4
19	Chain	4
22	50mm screws	2
24	19mm black round head screws	32
25	19mm round head screws	4

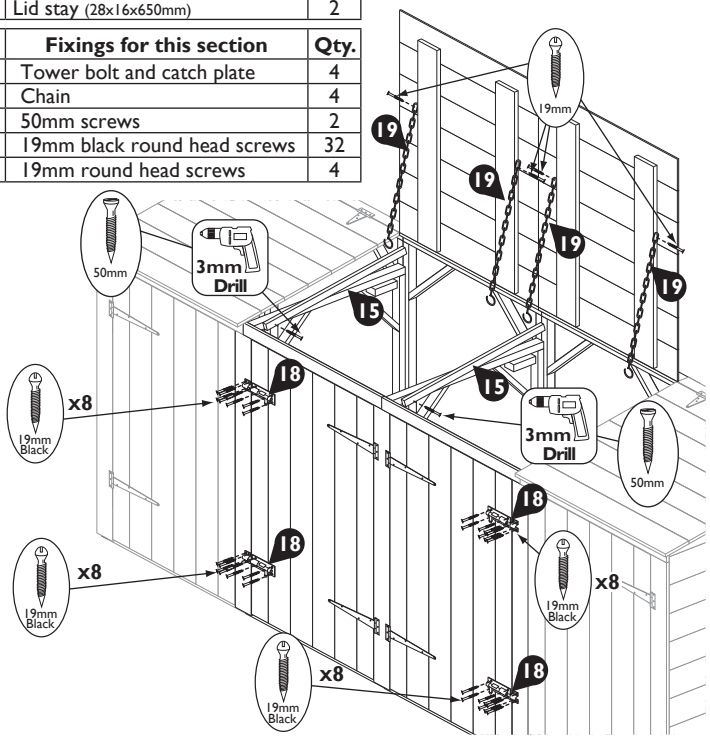

Important information - retain for future reference

Timber Information.
As timber is a natural material, there are certain weather conditions that may affect the materials properties. In times of excessive dry spells the material may lose some of its internal moisture causing a certain degree of shrinkage on a panel and in periods of excessive rain there will be a certain amount of swelling throughout the wooden panels. This process can not be avoided. If you have problems with certain boards shrinking in dry spells try to decrease the amount of direct sunlight on the building or the amount of air passing over the building. During hot spells spray water directly onto the panels with the aid of a garden hose.

If in doubt of any aspect regarding the assembly, use or safety of your building please contact us:

Help Line: (Normal Office Hours) 01829 261 121

Email: support@rowgar.co.uk

ROWLINSON GARDEN PRODUCTS LIMITED
Green Lane
Wardle Nr. Nantwich
Cheshire
CW5 6BN
www.rowlinsongarden.co.uk

We constantly improve the quality of our products, occasionally the components may differ from the components shown and are only correct at time of printing. We reserve the right to change the specification of our products without prior notice.

2026 © Rowlinson Garden Products Ltd